VINTAGE SIMON

5x32 J

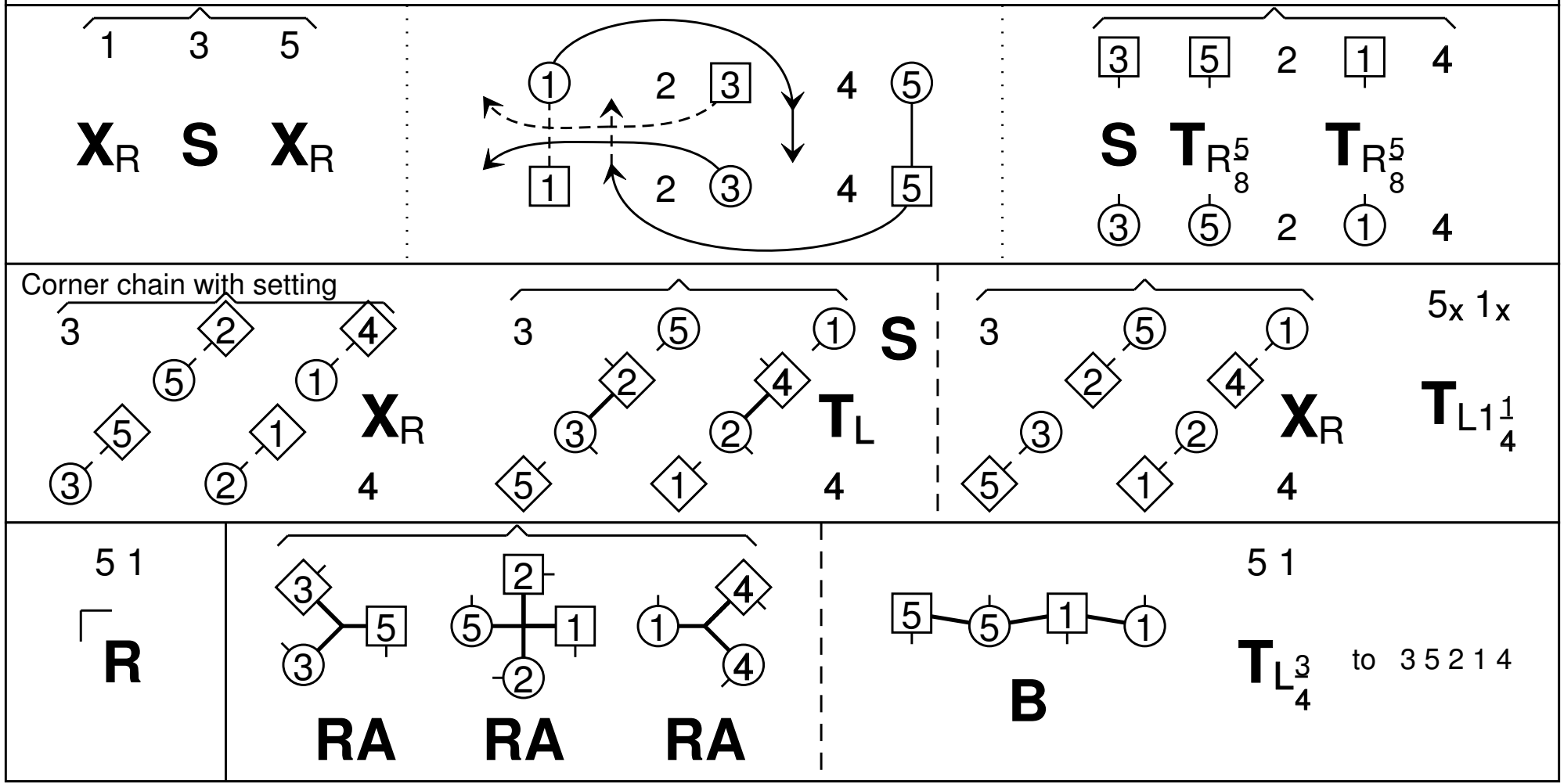

Dorothy Hargreaves, RSCDS Book 47.5

5C/5C longwise set.