THE ALDER BURN

8x32 J

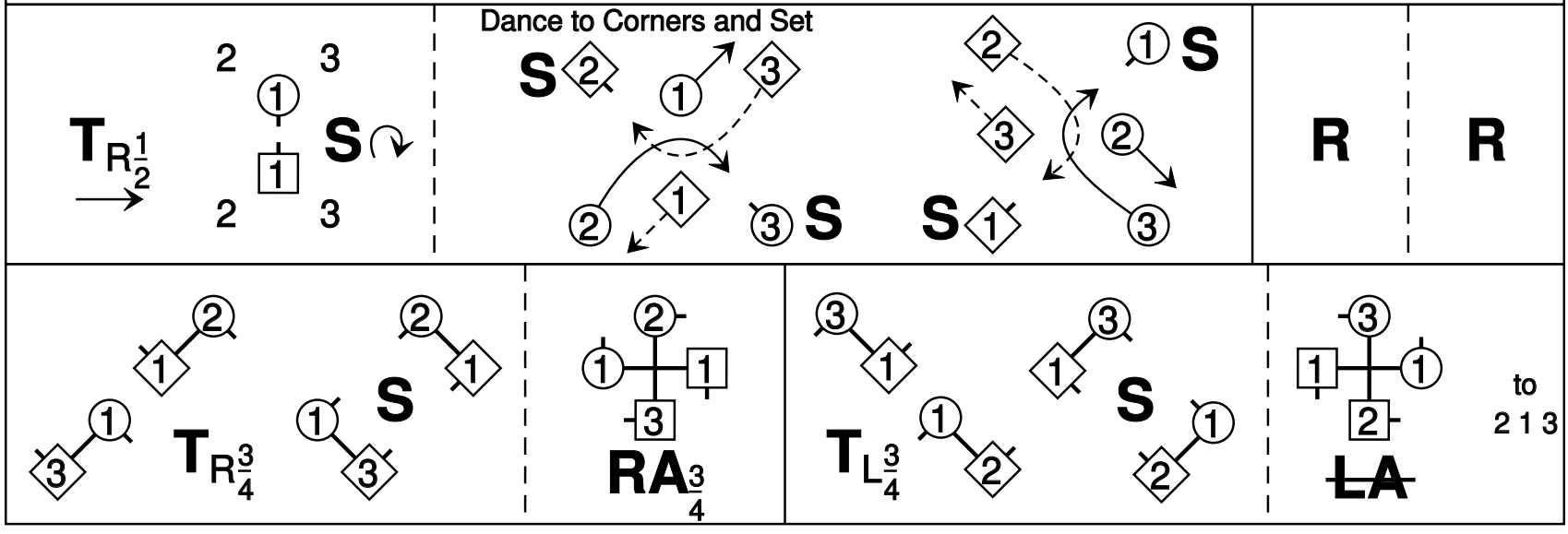

John Drewry, 1978, Brodie Book

3C/4C longwise set.