# THE ZOOLOGIST

**8x32 J**

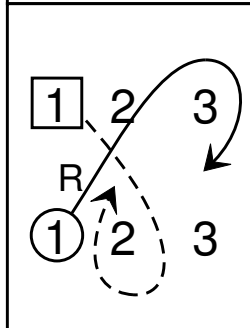


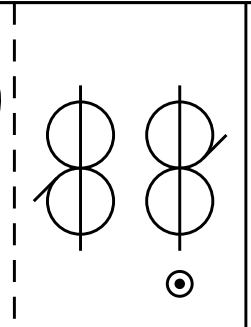

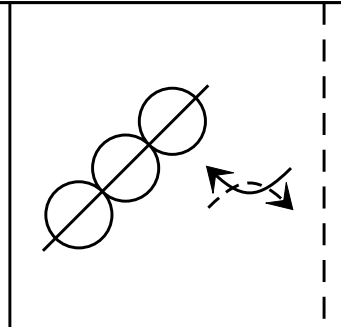

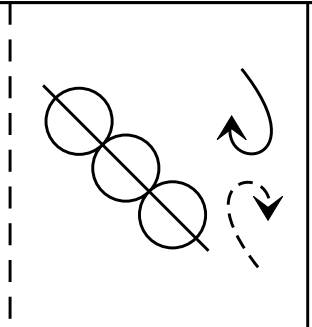

3 1x 2

**DT**

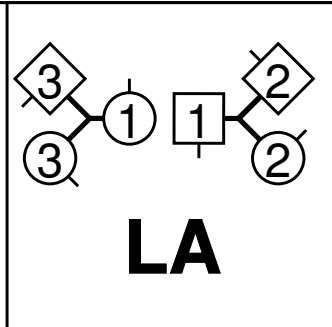


**LA**

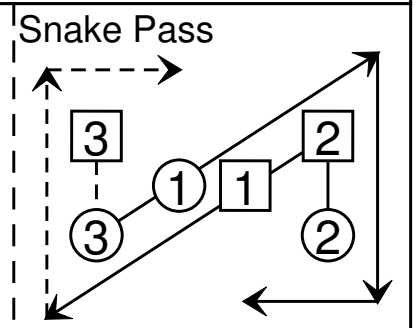


Duncan Brown, RSCDS Book 46.12

3C/4C longwise set.