THE DE'EL'S AWA' WI' THE EXCISEMAN 4x48 J

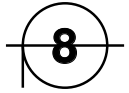

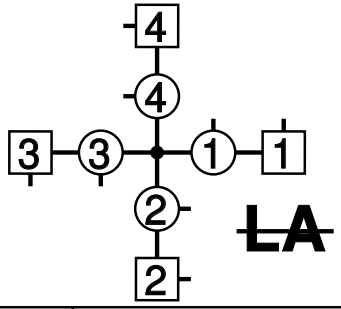

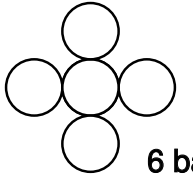

6 bars
give L hands
in centre

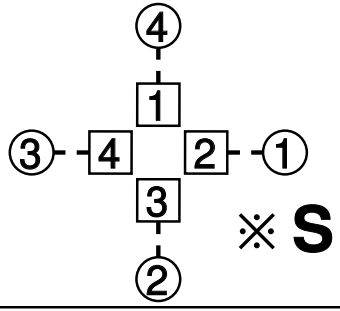

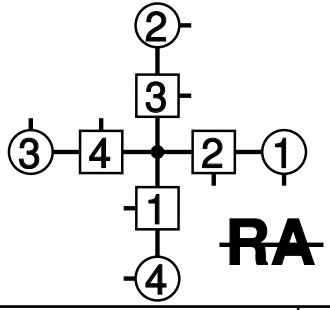

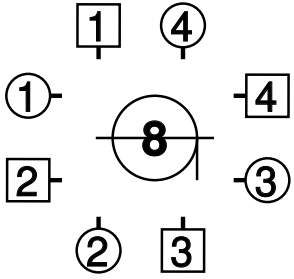

CHAIN
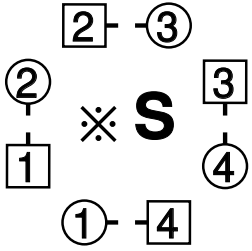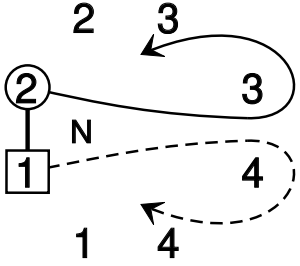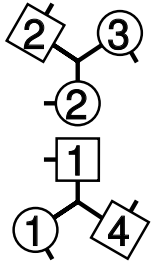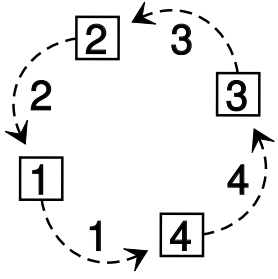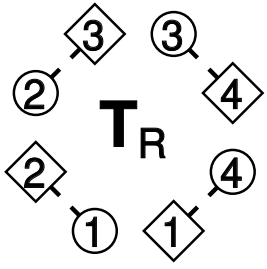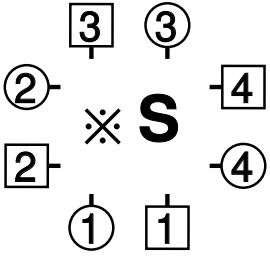
6 bars
1 bar/hand